NPN Silicon Epitaxial Planar Transistor

for switching and interface circuit and drive circuit applications

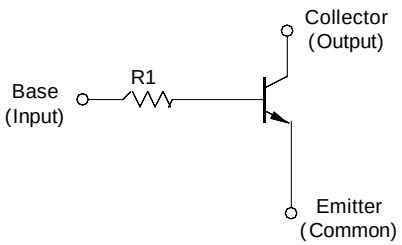

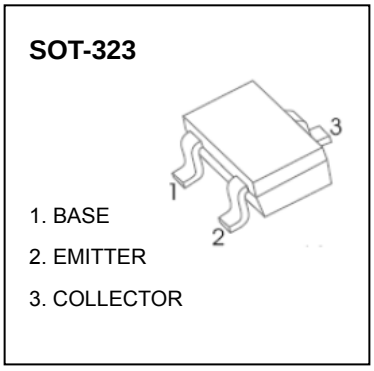

Features

- With built-in bias resistors
- Simplify circuit design
- Reduce a quantity of parts and manufacturing process

Resistor Values

Type	R1 (KΩ)			Marking Code
	Min.	Typ.	Max.	
MMBTRC110SSW	3.29	4.7	6.11	XD
MMBTRC111SSW	7	10	13	XE
MMBTRC112SSW	70	100	130	XF
MMBTRC113SSW	15.4	22	28.6	XH
MMBTRC114SSW	32.9	47	61.1	XJ

Absolute Maximum Ratings (T_a = 25 °C)

Parameter	Symbol	Value	Unit
Collector Base Voltage	V_{CBO}	50	V
Collector Emitter Voltage	V_{CEO}	50	V
Emitter Base Voltage	V_{EBO}	5	V
Collector Current	I_C	100	mA
Power Dissipation	P_{tot}	200	mW
Junction Temperature	T_j	150	°C
Storage Temperature Range	T_S	- 55 to + 150	°C

Characteristics at T_a = 25 °C

Parameter	Symbol	Min.	Typ.	Max.	Unit
DC Current Gain at V_{CE} = 5 V, I_C = 1 mA	h_{FE}	120	-	-	-
Collector Cutoff Current at V_{CB} = 50 V	I_{CBO}	-	-	100	nA
Emitter Cutoff Current at V_{EB} = 5 V	I_{EBO}	-	-	100	nA
Collector Emitter Saturation Voltage at I_C = 10 mA, I_B = 0.5 mA	$V_{CE(sat)}$	-	-	0.3	V
Transition Frequency at V_{CE} = 10 V, I_C = 5 mA	f_T	-	250	-	MHz

SOT-323 Package Outline Dimensions

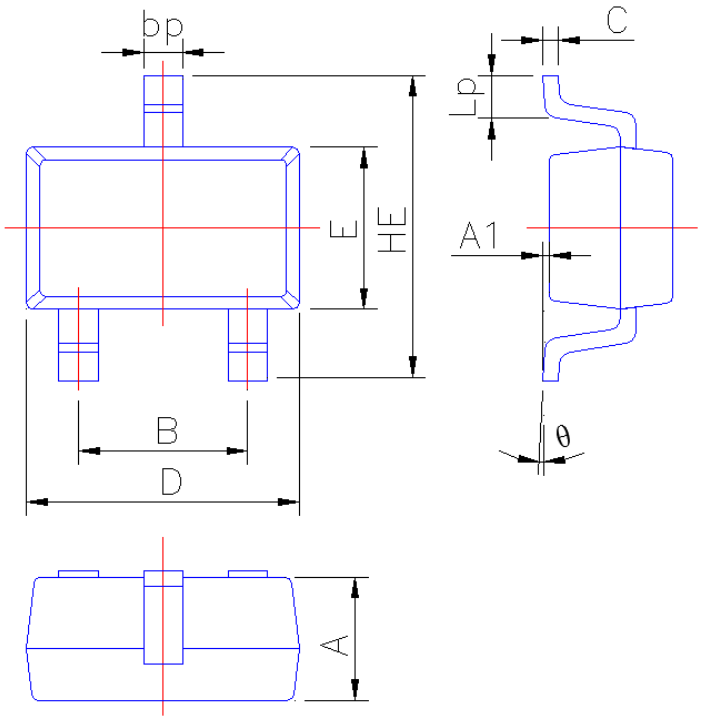

Symbol	Dimension in Millimeters	
	Min	Max
A	0.90	1.00
A1	0.010	0.100
B	1.20	1.40
bp	0.25	0.45
C	0.09	0.15
D	2.00	2.20
E	1.15	1.35
HE	2.15	2.55
Lp	0.25	0.46
θ	0°	6°